For customers in Switzerland and Liechtenstein, we've launched a new online shop. Orders can no longer be placed here, so please visit our **Swiss e-Shop** to continue shopping.

DETAILS

EC 90 flat Ø90 mm, brushless, 260 W, with Hall sensors

Part number 500267

PRICE SCALES	Quantity	Price per unit
Prices excluding VAT and shipping costs	1-4	**€276.73**
	5-19	**€232.20**
	20-49	**€201.15**
	from 50	**On request**

Start combination

Order quantity 1

Add to cart

Specifications | Description | Downloads

Specifications

TECHNICAL ILLUSTRATIONS

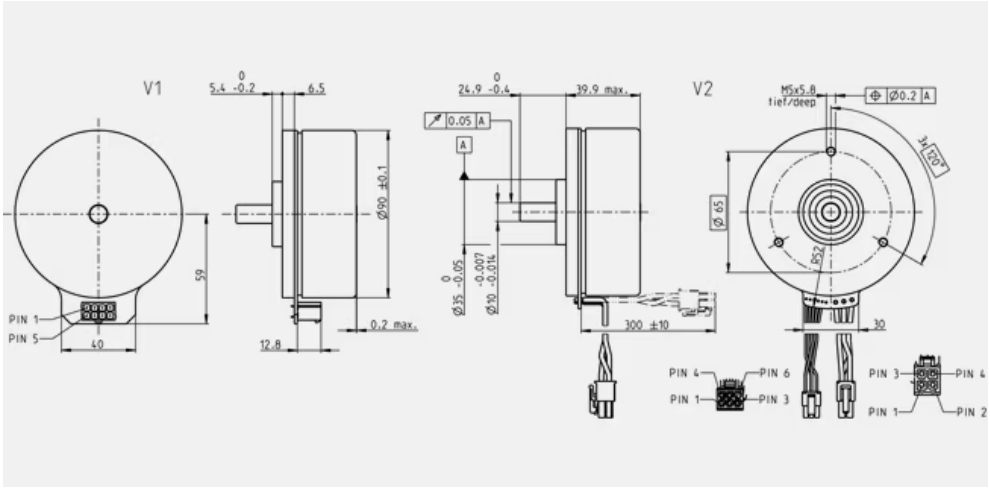

Dimension drawing

Information: Drawings are not to scale.

VALUES AT NOMINAL VOLTAGE	
Nominal voltage	48 V
No load speed	1960 rpm

No load current	278 mA
Nominal speed	1670 rpm
Nominal torque (max. continuous torque)	964 mNm
Nominal current (max. continuous current)	4.06 A
Stall torque	9410 mNm
Stall current	56.9 A
Max. efficiency	87 %
CHARACTERISTICS	
Terminal resistance	0.844 Ω
Terminal inductance	1.07 mH
Torque constant	231 mNm/A
Speed constant	41.3 rpm/V
Speed / torque gradient	0.151 rpm/mNm
Mechanical time constant	7.99 ms
Rotor inertia	5060 gcm²
THERMAL DATA	
Thermal resistance housing-ambient	1.78 K/W
Thermal resistance winding-housing	1.82 K/W
Thermal time constant winding	54.3 s
Thermal time constant motor	265 s
Ambient temperature	-40...+100 °C
Max. winding temperature	+125 °C
MECHANICAL DATA	
Bearing type	ball bearings
Max. speed	5000 rpm
Axial play	{0} {1}, at radial load {2} {3} {4}
	0.14 mm, at radial load > 58 N
Max. axial load (dynamic)	34 N
Max. force for press fits (static)	440 N
(static, shaft supported)	8000 N
Max. radial load	130 N, 10 mm from flange
OTHER SPECIFICATIONS	
Number of pole pairs	11
Number of phases	3
Number of autoclave cycles	0
PRODUCT	
Weight	985 g

Description

The flat design of the brushless **EC flat motors** makes them the perfect solution for many applications. The thought-through, simple design makes it possible to largely automate the manufacturing – this is reflected by the economical price.

Downloads

CAD-FILES (STEP)

CAD model (STEP) (ZIP 94 KB) Version 2019

CATALOG PAGE

Catalog page (english, PDF 106 KB) Version 2025

Videos

Add to wish list | Make a request | Send to a colleague | Print specifications

Selecting, combining, and configuring drive systems

Short delivery times for custom drives

Extensive product specifications and software

Product support

+41 (41) 666 18 00

Shopping made easy

Product selection

Shipping

Delivery

Payment

Payment options

Knowledge

Find out more about the interaction of motor, gearhead, sensors, and controller.

Knowledge & e-learning